APPLICATION FOR HIGHWAY PERMIT

UPPER DUBLIN TOWNSHIP, MONTGOMERY COUNTY, PA

To the Board of Commissioners: Date _____

Application is hereby made by _____
(Name of Person, firm, association or corporation)

of _____ PA, for permission
(Post Office Address)

to _____
(state purpose, location and description of work)

_____ Telephone: _____

in accordance with accompanying sketch, and under and subject to all the conditions, restrictions and regulations as set forth in Township Ordinance No.3, with the same force and effect as if written or printed in this application; and under and subject to such special conditions or requirements applicable to this work, as may be designated by the Public Works Department.

_____
(insert special requirements, or may be attached by rider)

The applicant hereby agrees to assume all liability for all or any damages to person or property occurring to the public, or to Upper Dublin Township, which may or might result from the opening, excavation or occupying of said highway, street or sidewalk. Has an approved Bond and also a certificate, showing that Liability Insurance is carried, been filed with the Board of Commissioners?

_____

What will be the actual dimensions of the openings or surface broken, including any enlargement required as an incident of the repair to such paving to restore same to its former condition? _____

Will part of the highway be used for the storage of materials? _____

What will be the length of time the highway will be so occupied? _____

Will any poles be erected or replaced? If so, give number. _____

Will any driveway entrance, curb or sidewalk be constructed? _____

Has the required survey been made establishing the line and grade along the highway in accordance with the Township plan?

_____

_____ Or _____
(Signature of Applicant) (Authorized Agent)

Amount of payment accompanying application for permit _____ ($) _____
(Make check payable to "Treasurer of Upper Dublin Township.")

Contact Public Works Department at 215-643-1600 x3233 to determine fee. Mail completed application to:
Mary Anne Fennell, Upper Dublin Township, 801 LOCH ALSH AVENUE, FORT WASHINGTON, PA 19034-1697

NOTICE: The above permit fee is subject to change after final inspection. Additional sums, if required by the Ordinance, will be billed and payment must be received within ten days of the date of billing.

HIGHWAY OPENING PERMIT

BOARD OF COMMISSIONERS, UPPER DUBLIN TOWNSHIP, MONTGOMERY COUNTY, PA

Permission is hereby granted to the stated applicant for the stated purpose on this application at the above stated location, subject to all the terms and conditions stated and referred to in above application and the requirements as set forth in the Upper Dublin Township Ordinances and regulations.

The receipt of permit fee paid to the Township in the amount of $ _____ is hereby acknowledged.

Approved for the issuance of permit.

_____ Date _____ Permit No. _____
(Township Official)

ATTENTION: The Public Works Department of Upper Dublin Township
MUST be NOTIFIED 24 HOURS PRIOR to the start of construction
Call (215) 643-1600 x3233

NOTICE: APPLICANT MUST CALL "PA ONE CALL" (1-800-242-1776) PRIOR TO EXCAVATING

UPPER DUBLIN TOWNSHIP
PUBLIC WORKS DEPARTMENT

Concrete Inspections

1) All Highway Opening Permits (HOPS) need to be filed and issued prior to the commencement of work. The execution of the HOP indicates that you have read and understand the terms listed below.

2) Contractor must provide Certificate of Insurance and emergency contact information to the office and the inspector prior to the commencement of work.

3) Contractor must provide the Township inspector with a slip from the concrete delivery truck at the time of installation.

4) Contractor must establish an inspection time by calling the Public Works Department at least 24 hours in advance. Please call Mary Anne at 215.643.1600 x 3233. The following inspections are required:

   A. Compacted sub-grade.
   B. Forms installed, braced and compacted stone-base.
   C. The installation of the Aquron 2000 concrete curing compound.
   D. Type AA, 3750 PSI concrete (ticket to be given to inspector)
   E. Backfill, grade and seed (sidewalks and curbs)
   F. Steel curb forms (front and back) to be clean, oiled, pinned and wired prior to pour.
   G. Backfill in road to consist of 6" of 2A material compacted installed and a minimum of 6 1/2" of 19mm Super Pave installed and compacted in 3" lifts. All paving edges to be tack coated.
   H. Driveway restoration at 11 1/2" excavation. This requires 8" of 2A material compacted, 2" of 19.0mm and 1 1/2" of 9.5mm paving to be installed. Joints are to be sealed with PG-6422. All paving edges to be tack coated.
   I. All of the above inspections shall be performed and confirmed by the inspector and the contractor during each phase of the project. All signatures are required for the permit to be considered complete. If any of the above inspections are not completed a cease and desist order will be issued and the installed concrete will be removed to the satisfaction of the Township.

_____
Print Name

_____
Emergency Phone Number

_____
Signature

Rev 2013

Upper Dublin Township
Public Works Department
801 Loch Alsh Avenue
Fort Washington, PA 19034
Phone: 215-643-1600
Fax: 215-542-0797
www.upperdublin.net

Requirements for Trench Excavating in Upper Dublin Township

- ☐ PA 1 call required
- ☐ Trenches five (5) feet (1.5 meters) deep or greater require a protective system, unless the excavation is made entirely in stable rock. If less than five (5) feet, a competent person may determine that a protective system is not required. The certification paper work for any protective systems is to be on site during the work period.
- ☐ Road plates should be available and will be required if necessary.
- ☐ All stone backfill (2a) in 8" (eight inch) compacted lifts is required. (Flowable fill will be considered.)
- ☐ 3 day notice, prior to excavation, is required if the road is to be closed.
- ☐ 48 hour notice for inspection is required.
- ☐ The proper utility must be notified
- ☐ UD TWP standards are required. UD TWP details RD108, RD109, CC200 & CC204 are attached.
- ☐ Code Enforcement must be notified
- ☐ All OSHA regulations apply
- ☐ An OSHA trained competent person is required to be on site during work hours
- ☐ Road signage and/or flagmen will be required. Supply a road signage plan.
- ☐ Safety vest and equipment must be on site and in place prior to excavation.
- ☐ Head protection (hard hat) is required.
- ☐ A ladder is required to enter and exit the trench AS PER OSHA REGULATIONS.
- ☐ A 4 (four) gas meter is required for any trench 4' (feet) or over.
- ☐ Lighted street barricades/barrels are required to be on site prior to start of excavation and put in place as required.
- ☐ The attached excavation check list must be completed and available upon request from the inspector.
- ☐ Attached is a summary of OSHA main requirements as a reference only. The contractor is responsible for all OSHA compliance.

I have read and agree with all the above statements / requirements.

Signature: _____ Date: _____

PLEASE NOTE:

THE ABOVE ITEMS MUST BE ON SITE AND AVAILABLE PRIOR TO THE START OF THE WORK.

ALL OF THE ABOVE CONDITIONS ARE REQUIRED TO BE MET. IF THE ABOVE CONDITIONS ARE NOT MET AT ANY TIME, UPPER DUBLIN TOWNSHIP WILL STOP WORK UNTIL THE ISSUE IS CORRECTED.

Concrete Checklist for Residential Sidewalk and Curb

- [ ] 1 PA One Calls required prior to start of any work. Contractors responsibility.
- [ ] 2 Certificate of Insurance is required prior to start of any work.
- [ ] 3 Concrete to be used is PA DOT Class AA (3,750 psi a e).
- [ ] 4 All concrete to be sealed with Aquron CPT 2000 as per detail.
- [ ] 5 Copies of material tickets are to be supplied to the inspector.
- [ ] 6 No monolithic concrete pours are permitted.
- [ ] 7 No Saturday concrete pours are permitted.
- [ ] 8 No concrete pours after 2:00 PM without approval.

- [ ] 9 **Sidewalk Work:**
  - [ ] A. 4 inches 2B stone to be placed under sidewalk and compacted with vibrator.
  - [ ] B. 4 inches of concrete is required - (2x4 must have minimum of 1/2" clearance from the stone grade).
  - [ ] C. Expansion material is to be placed every 30 feet full depth.
  - [ ] D. Control Joints are to be placed every 5 feet.
  - [ ] E. Standards for Replacement Curbs, Sidewalks & Aprons
  - [ ] F. Replacement Concrete Curb, Sidewalk & Apron Details (drawings)
  - [ ] G. UDT Standard Detail Proposed Sidewalk

- [ ] 10 **Curb Work:**
  - [ ] A. 4 inches 2B stone to be placed under curb and compacted with vibrator.
  - [ ] B. Steel forms to be used for all installations. No wood forms are permitted.
  - [ ] C. Expansion material is to be placed every 40 feet full depth. It shall be placed between the depressed curb and the apron.
  - [ ] D. Control Joints are to be placed every 10 feet.
  - [ ] E. Curb shall be dowel pinned into inlets. Two (2) #8 x 1' dowel bars on both sides of the inlet. .
  - [ ] F. Depressed curb shall have two (2) #5 rebars placed as per detail.
  - [ ] G. Standards for Replacement Curbs, Sidewalks & Aprons
  - [ ] H. Replacement Concrete Curb, Sidewalk & Apron Details (drawings)
  - [ ] I. UDT Standard Detail Concrete Curb Detail
  - [ ] J. UDT Standard Detail Temporary Road Restoration within Township Roads
  - [ ] K. UDT Standard Detail Permanent Road Restoration within Township Roads
  - [ ] L. UDT Standard Detail Single Family Residential Bituminous Driveway
  - [ ] M. UDT Standard Detail Multi-Family Residential & Non-Residential Bituminous Driveway & Parking

- [ ] 11 **Apron Work:**
  - [ ] A. 6 inches 2B stone to be placed under apron and apron walk.
  - [ ] B. 6 inches of concrete is required.
  - [ ] C. WWF 6 x 6 W1.4 x W1.4 to be placed in the apron and apron walk.
  - [ ] D. Standards for Replacement Curbs, Sidewalks & Aprons
  - [ ] E. Replacement Concrete Curb, Sidewalk & Apron Details (drawings)
  - [ ] F. UDT Standard Detail Concrete Driveway Apron
  - [ ] G. UDT Standard Detail Concrete Driveway Ramp w/Curbed Radius Returns
  - [ ] H. UDT Standard Detail Single Family Residential Bituminous Driveway
  - [ ] I. UDT Standard Detail Multi-Family Residential & Non-Residential Bituminous Driveway & Parking

- [ ] 12 **Inspections:**
  - [ ] A. Sub Grade and pour inspections are required.
  - [ ] B. Inspections are to be scheduled 24 hours in advance.
  - [ ] C. Concrete Inspections Detailed Listing Sheet (see details).
  - [ ] D. Call Mary Anne Fennell to schedule inspections at 215-643-1600 (x3233).

- [ ] 13 **Job Site Requirements:**
  - [ ] A. No staging or storing of construction material in the streets is permitted without prior approval.
  - [ ] B. All streets are to be kept clean of all construction debris.
  - [ ] C. Lighted barricades, reflective cones and caution tape are required around all work areas.
  - [ ] D. All traffic control and traffic patterns must be installed per PennDOT requirements.

Contractor Name _____(please print)

Signature: _____

Date: _____

OSHA REQUIREMENTS

TRENCHTECH, INC
Shoring Solutions
1.800.443.6832
info@shoringsolutions.com
www.ShoringSolutions.com

OSHA 29 CFR Part 1926.650-.652 Subpart P - Excavations:

OSHA's excavation standard contains many different requirements as well as several appendices that can be confusing at first glance. The following information summarizes the main requirements in order to help contractors prepare the job site for OSHA inspections.

- Prior to digging, the contractor shall locate and identify all underground utilities such as sewer, telephone, fuel, electric, water lines, etc. that may be encountered during the excavation.
- The contractor must designate a competent person or qualified person to assess the excavation and determine that it is safe for project personnel to enter and work.
- All surface encumbrances such as signs, trees, fences, poles, sidewalks, etc. that create a hazard to employees must be removed or supported during the excavation.
- All excavating must maintain a minimum of 10 ft. from overhead power lines rated 50 kV or less, with 0.4 in. of clearance added for every kV over 50.
- Support systems shall be provided to ensure the stability of adjacent structures endangered by excavation operations.
- If excavation is over 5 ft. deep, a protective system such as a trench shield shall be used to prevent a cave-in.
- The contractor must provide a safe means of entering or exiting any excavation over 4 ft. deep.
- A means of egress from a trench such as a ladder, ramp, or stairway shall be located within 25 ft. of workers.
- In excavations over 4 ft. in depth, the potential for the accumulation of hazardous gases or vapors must be realized.
- Shielding systems shall be installed and removed in a manner that protects employees from cave-ins, structural collapses, or from being struck by any part of the support system.
- Shielding systems shall be installed in a manner to restrict lateral or other hazardous movement of the shield in the event of a sudden collapse.
- The bottom of the shielding system can not be positioned greater than 2 ft. above the bottom of the excavation.
- Shielding systems and their components shall not be subjected to loads which they are not designed to withstand.
- Shielding systems and their components shall be securely connected to prevent predictable failures.
- The removed spoil shall not be stockpiled closer than 2 ft. from the excavation's edge.
- Backfilling shall progress together with the removal of support systems from excavations.
- Any excavation left unattended must be barricaded, fenced or otherwise protected against accidental entry by pedestrians.
- Employees exposed to vehicular traffic must wear a high-visibility vest, and the excavation must be protected from traffic.
- If employees must cross over an open excavation, a safe means must be provided so that the employees do not have to jump across the trench.
- No workers shall enter or work in excavations where standing water is visible unless adequate protection is used.
- No employee shall be permitted underneath loads handled by lifting or digging equipment.
- If the competent person finds evidence of a hazardous situation that may result in a cave-in, protective system failure, a hazardous atmosphere, or other hazardous conditions, exposed employees shall be removed from the hazardous area until the necessary precautions have been taken to ensure safety.

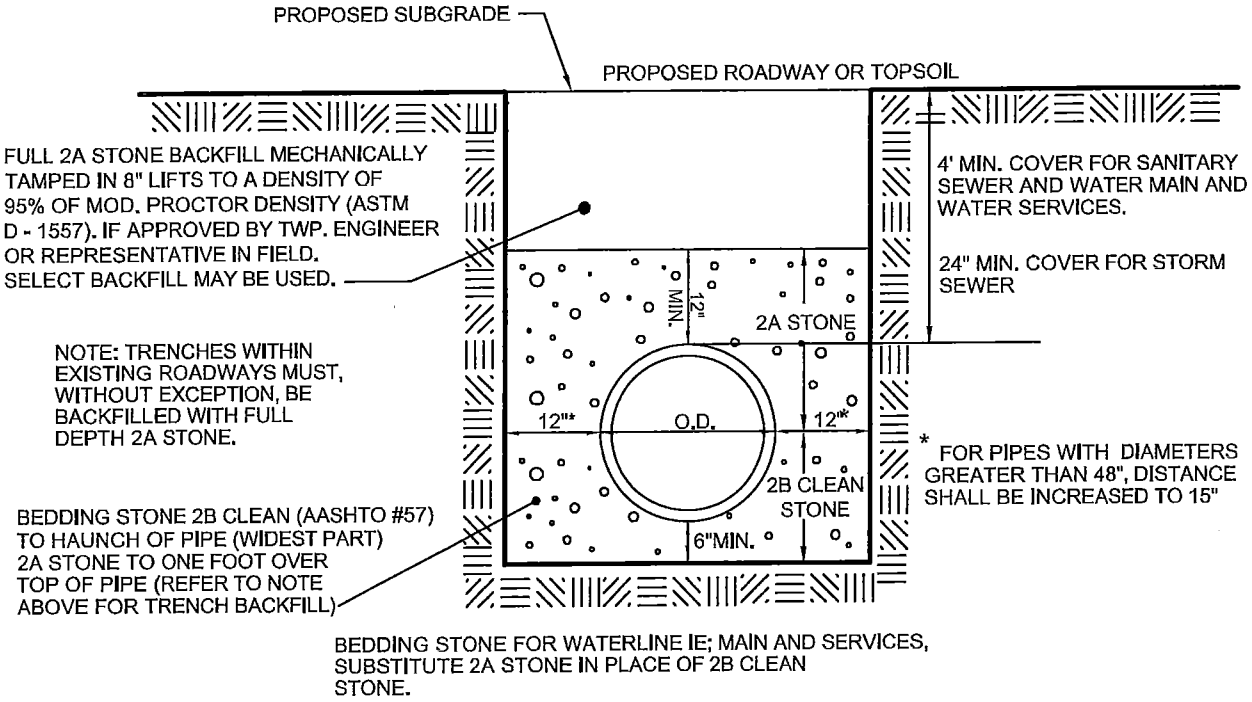

NOTE:
ALL GAS, ELECTRIC & TELECOMMUNICATION LINES, AND WATER SERVICE TRENCHES WITHIN EXISTING ROADWAYS, PROPOSED ROADWAYS, ALL RIGHT OF WAYS, BIKETRAIL EASEMENTS, PROPOSED DRIVEWAYS, APRONS AND SIDEWALKS MUST, WITHOUT EXCEPTION, BE BACKFILLED WITH FULL DEPTH 2A STONE AFTER TOP SCREENING.
ALL UTILITY TRENCHES MUST BE COMPACTED (MECHANICALLY TAMPED) IN 8" LIFTS.

INDEX

UPPER DUBLIN TOWNSHIP STANDARD DETAIL

TYPICAL TRENCH DETAIL

Metz Engineers

DATE	10-2013	NOT TO SCALE	DR324

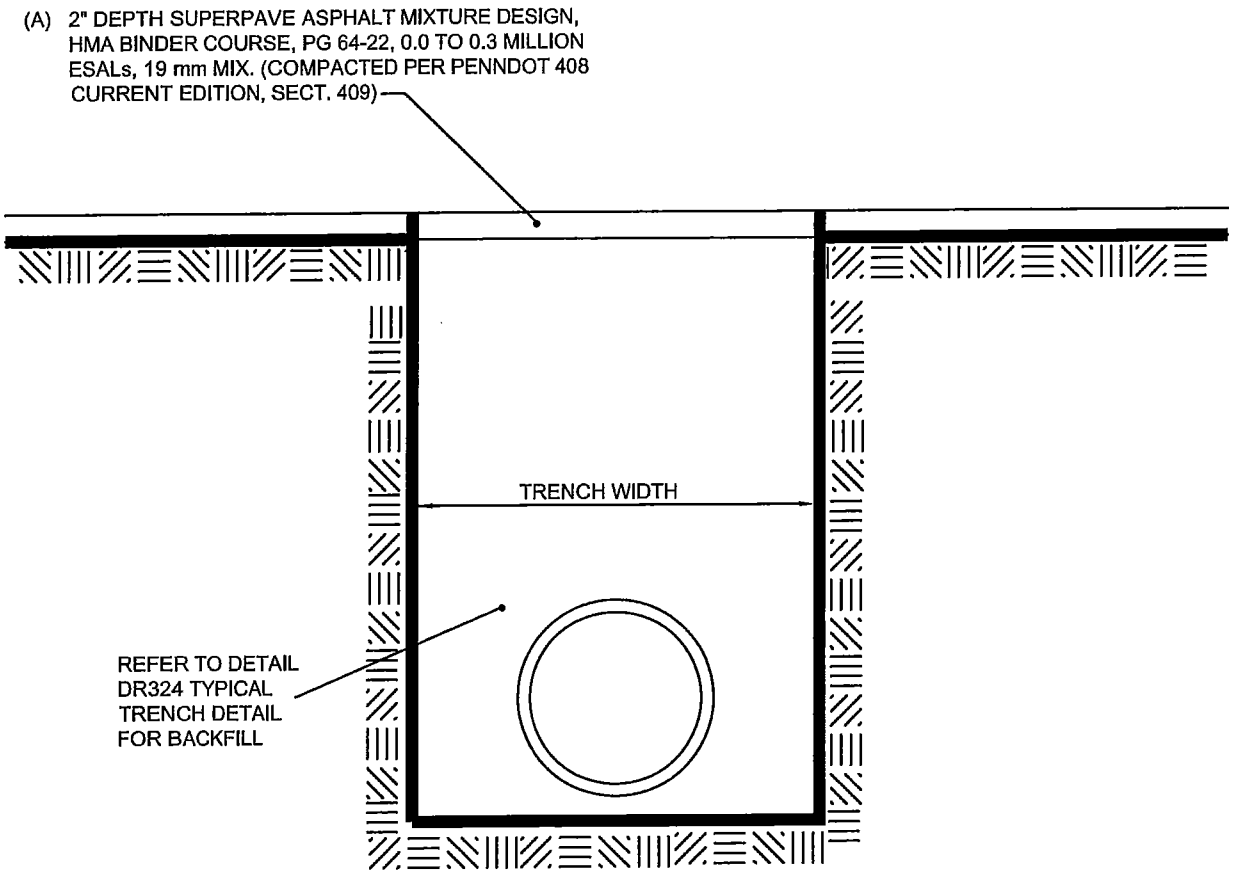

UPPER DUBLIN TOWNSHIP STANDARD DETAIL

TEMPORARY ROAD RESTORATION WITHIN TOWNSHIP ROADS

DATE	10-2013	NOT TO SCALE	RD108

Metz Engineers

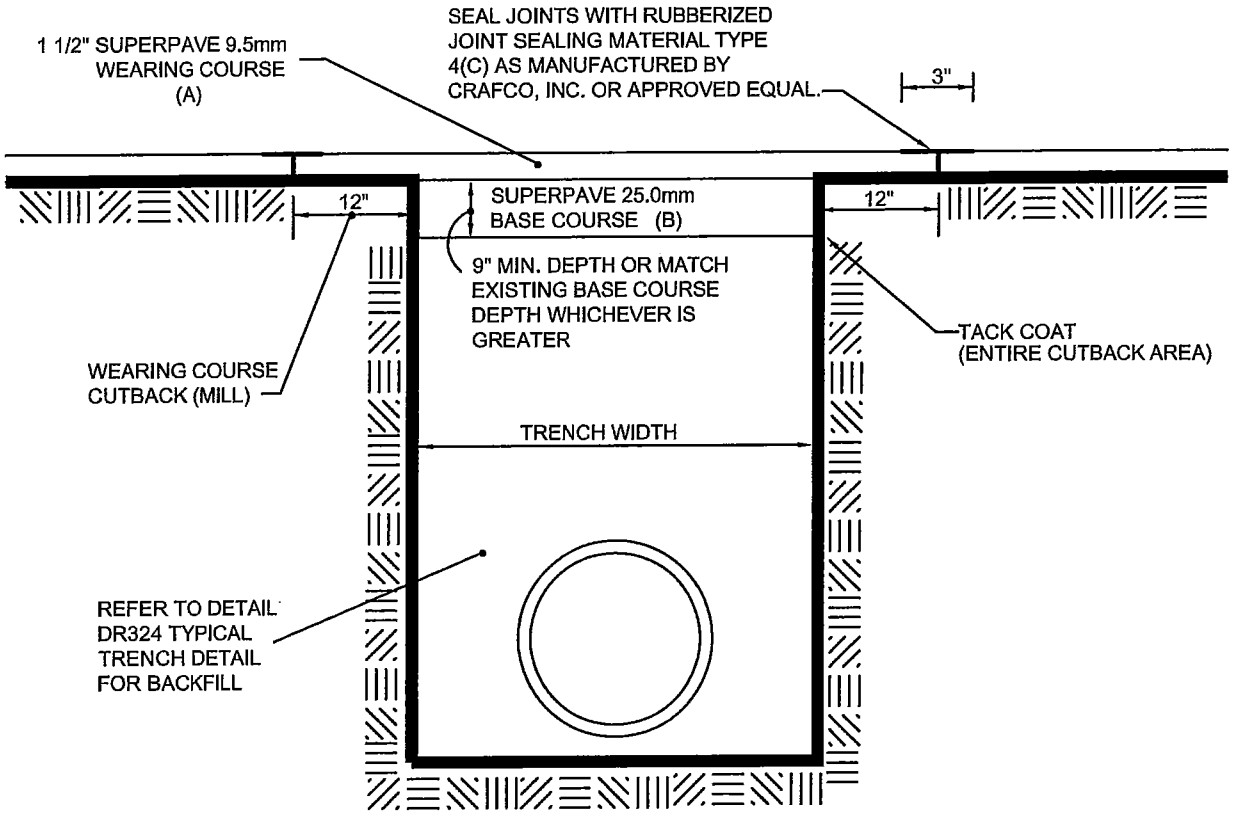

NOTES:
1. PROVIDE MATERIALS AND CONSTRUCTION IN ACCORDANCE WITH THE REQUIREMENTS OF PENNDOT PUBLICATION 408, CURRENT EDITION, INCLUDING BUT NOT LIMITED TO SECTION 210-SUBGRADE, SECTION 350-SUBBASE AND SECTION 409-SUPERPAVE MIXTURE DESIGN, STANDARD AND RPS CONSTRUCTION OF PLANT-MIXED HMA COURSES, AND AS MODIFIED HEREIN.

(A) 1 1/2" DEPTH SUPERPAVE ASPHALT MIXTURE DESIGN, HMA WEARING COURSE, PG 64-22, 0.0 TO 0.3 MILLION ESALs, 9.5mm MIX, SRL H

(B) 9" MINIMUM DEPTH (OR MATCH EXISTING BASE COURSE, WHICHEVER IS GREATER) SUPERPAVE ASPHALT MIXTURE DESIGN, HMA BASE COURSE, PG 64-22, 0.0 TO 0.3 ESALs, 25.0mm MIX.

UPPER DUBLIN TOWNSHIP STANDARD DETAIL

PERMANENT ROAD RESTORATION WITHIN TOWNSHIP ROADS

DATE	10-2013	NOT TO SCALE	RD109

Metz Engineers

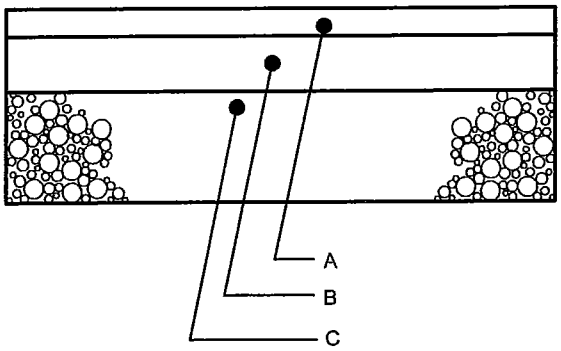

SINGLE FAMILY RESIDENTIAL:

A. 1 1/2" DEPTH SUPERPAVE ASPHALT MIXTURE DESIGN, HMA WEARING COURSE, PG 64-22, 0.0 TO 0.3 MILLION ESALs, 9.5mm MIX, SRL H

B. 2" DEPTH SUPERPAVE ASPHALT MIXTURE DESIGN, HMA BINDER COURSE, PG 64-22, 0.0 TO 0.3 MILLION ESALs, 19.0mm MIX.

C. 8" 2A STONE

NOTES:
1. PROVIDE MATERIALS AND CONSTRUCTION IN ACCORDANCE WITH THE REQUIREMENTS OF PENNDOT PUBLICATION 408, CURRENT EDITION, INCLUDING BUT NOT LIMITED TO SECTION 210-SUBGRADE, SECTION 350-SUBBASE AND SECTION 409-SUPERPAVE MIXTURE DESIGN, STANDARD AND RPS CONSTRUCTION OF PLANT-MIXED HMA COURSES, AND AS MODIFIED HEREIN.

SUBGRADE STABILITY VERIFICATION

After contractor has prepared subgrade in accordance with PennDot Publication 408, Section 210 (subgrade) a subgrade stability verification is required prior to placement of sub-base material. A triaxle fully loaded maximum load (quarry slip of loaded weight will be required in the field) is required to run over entire roadway subgrade (including curb lines), over all trenches and anywhere directed by Township Engineer or his/her representatives in the field. Areas displaying pronounced elasticity, pumping, movement or deformation under the loaded triaxle will be noted and marked in the field. The areas noted and/or marked showing unstable subgrade must be corrected and reverified for required stability prior to starting subbase construction. All areas that are to be filled, stoned, paved and/or curbed are required to be proofrolled by this method. A subgrade stability re-verification is required after any/all rain events, snow events (once cleared and/or melted), introduction of moisture to the subgrade or sub-base, or as determined by the Township Engineer's representative in the field.

UPPER DUBLIN TOWNSHIP STANDARD DETAIL

SINGLE FAMILY RESIDENTIAL BITUMINOUS DRIVEWAY

DATE	10-2013	NOT TO SCALE	RD111

Metz Engineers

PAVED DRIVEWAY - MULTI FAMILY & NONRESIDENTIAL

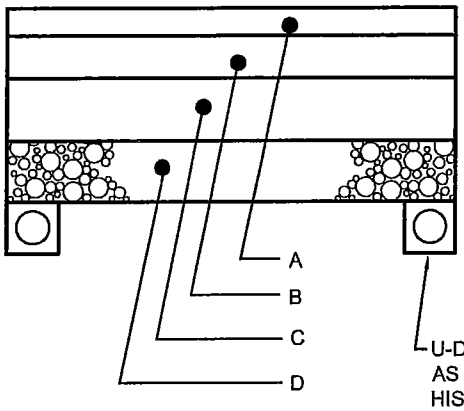

U-DRAIN (TYP.) TO BE INSTALLED AS REQUIRED BY TOWNSHIP OR HIS/HER REPRESENTATIVE IN THE FIELD. SEE PERFORATED UNDERDRAIN DETAIL DR 328.

STANDARD:

A. 1 1/2" DEPTH SUPERPAVE ASPHALT MIXTURE DESIGN, HMA WEARING COURSE, PG 64-22, 0.0 TO 0.3 MILLION ESALs, 9.5mm MIX, SRL H

B. 2" DEPTH SUPERPAVE ASPHALT MIXTURE DESIGN, HMA BINDER COURSE, PG 64-22, 0.0 TO 0.3 MILLION ESALs, 19.0mm MIX.

C. 3" DEPTH SUPERPAVE ASPHALT MIXTURE DESIGN, HMA BASE COURSE, PG 64-22, 0.0 TO 0.3 MILLION ESALs, 25.0mm MIX.

D. 6" 2A STONE

NOTES:
1. PROVIDE MATERIALS AND CONSTRUCTION IN ACCORDANCE WITH THE REQUIREMENTS OF PENNDOT PUBLICATION 408, CURRENT EDITION, INCLUDING BUT NOT LIMITED TO SECTION 210-SUBGRADE, SECTION 350-SUBBASE AND SECTION 409-SUPERPAVE MIXTURE DESIGN, STANDARD AND RPS CONSTRUCTION OF PLANT-MIXED HMA COURSES, AND AS MODIFIED HEREIN.

SUBGRADE STABILITY VERIFICATION

After contractor has prepared subgrade in accordance with PennDot Publication 408, Section 210 (subgrade) a subgrade stability verification is required prior to placement of sub-base material. A triaxle fully loaded maximum load (quarry slip of loaded weight will be required in the field) is required to run over entire roadway subgrade (including curb lines), over all trenches and anywhere directed by Township Engineer or his/her representatives in the field. Areas displaying pronounced elasticity, pumping, movement or deformation under the loaded triaxle will be noted and marked in the field. The areas noted and/or marked showing unstable subgrade must be corrected and reverified for required stability prior to starting subbase construction. All areas that are to be filled, stoned, paved and/or curbed are required to be proofrolled by this method. A subgrade stability re-verification is required after any/all rain events, snow events (once cleared and/or melted), introduction of moisture to the subgrade or sub-base, or as determined by the Township Engineer's representative in the field.

UPPER DUBLIN TOWNSHIP STANDARD DETAIL
MULTI-FAMILY RESIDENTIAL AND
NON-RESIDENTIAL BITUMINOUS DRIVEWAY & PARKING

DATE	10-2013	NOT TO SCALE	RD112

Metz Engineers

UPPER DUBLIN TOWNSHIP
PUBLIC WORKS DEPARTMENT

Standards for Replacement Curbs,
Sidewalks, and Drive Aprons

The following requirements and written details will supplement the current edition of the Upper Dublin Township Engineering and Construction Standards. These requirements are intended to clarify any technical construction practices unique to replacement work and not covered by development and PennDOT procedures.

1) All subgrade in sidewalk, apron, and curb areas will be inspected for suitability, and compacted with vibratory or pneumatic equipment. Upon acceptance by the Township inspector for depth and suitability, base stone will be leveled and compacted.

2) All tie-in locations for replacement work will be cut full depth, with adequate joint material sufficient to the installation depth. Joint material is subject to pre-approval by inspector.

3) Replacement concrete flatwork or curb which has sunken over utility connections will have sufficient subgrade compaction and have reinforcing placed as shown in detail #2.

4) All flatwork will be raked-off and hand- or mechanical-screeded between forms, in accordance with good construction practice (see sidewalk detail). Ballfloats or long trowels will not be considered acceptable alternates. Variations in new flatwork of more than 1/8" in 1 foot will be considered unacceptable, and require removal and reinstallation.

5) Wooden forms for sidewalks and drive aprons will be considered acceptable only if constructed of full-dimensional (1½" minimum) straight finished lumber. Only steel forms in good condition, as specified in the Standards, shall be used for curb work.

6) Only materials utilized for work in progress, or scheduled for the next day, shall be stored in the road. Locations are subject to approval of the site inspector, and will require lighted barricades overnight.

7) All excavations are to be barricaded with lights as required.

UPPER DUBLIN TOWNSHIP - PUBLIC WORKS DEPT.

REPLACEMENT CONCRETE CURB, SIDEWALK + APRON DETAILS

SUPPLEMENTAL TO UPPER DUBLIN TOWNSHIP CONSTRUCTION STANDARDS, PG: 9, 10, 22, 23, 24, 25 + 26

Detail 1 - Replacement Curb

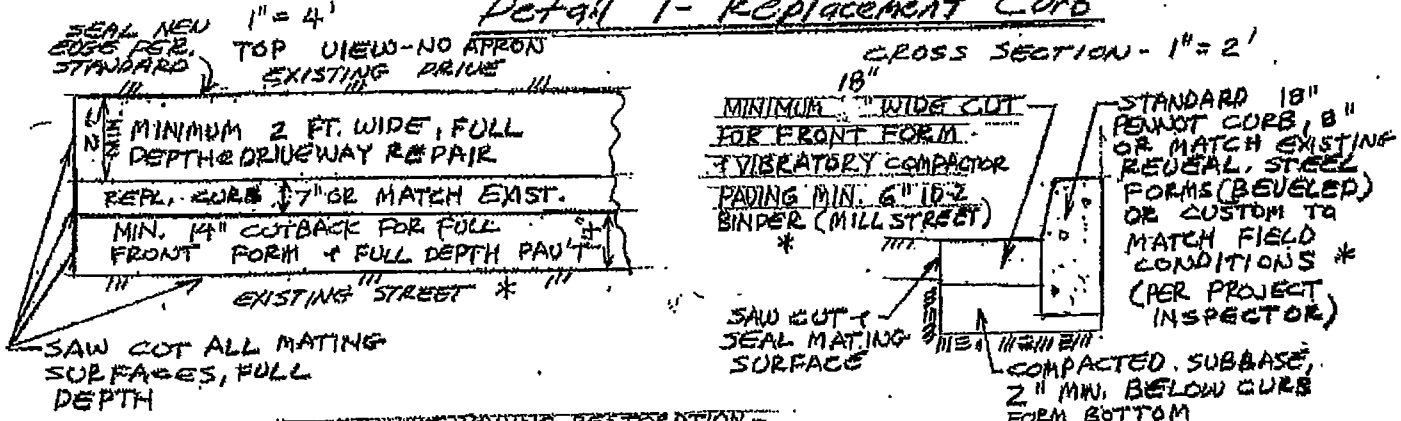

* PERMANENT PAVING RESTORATION -
6" ID-2 BINDER, 2 LIFTS (MILL STREET)
STD. 8½" PENNOT PAVING - ALL OTHERS
(OR MATCH EXISTING BASE)

DETAIL 2 - REPLACEMENT SIDEWALK OR APRON

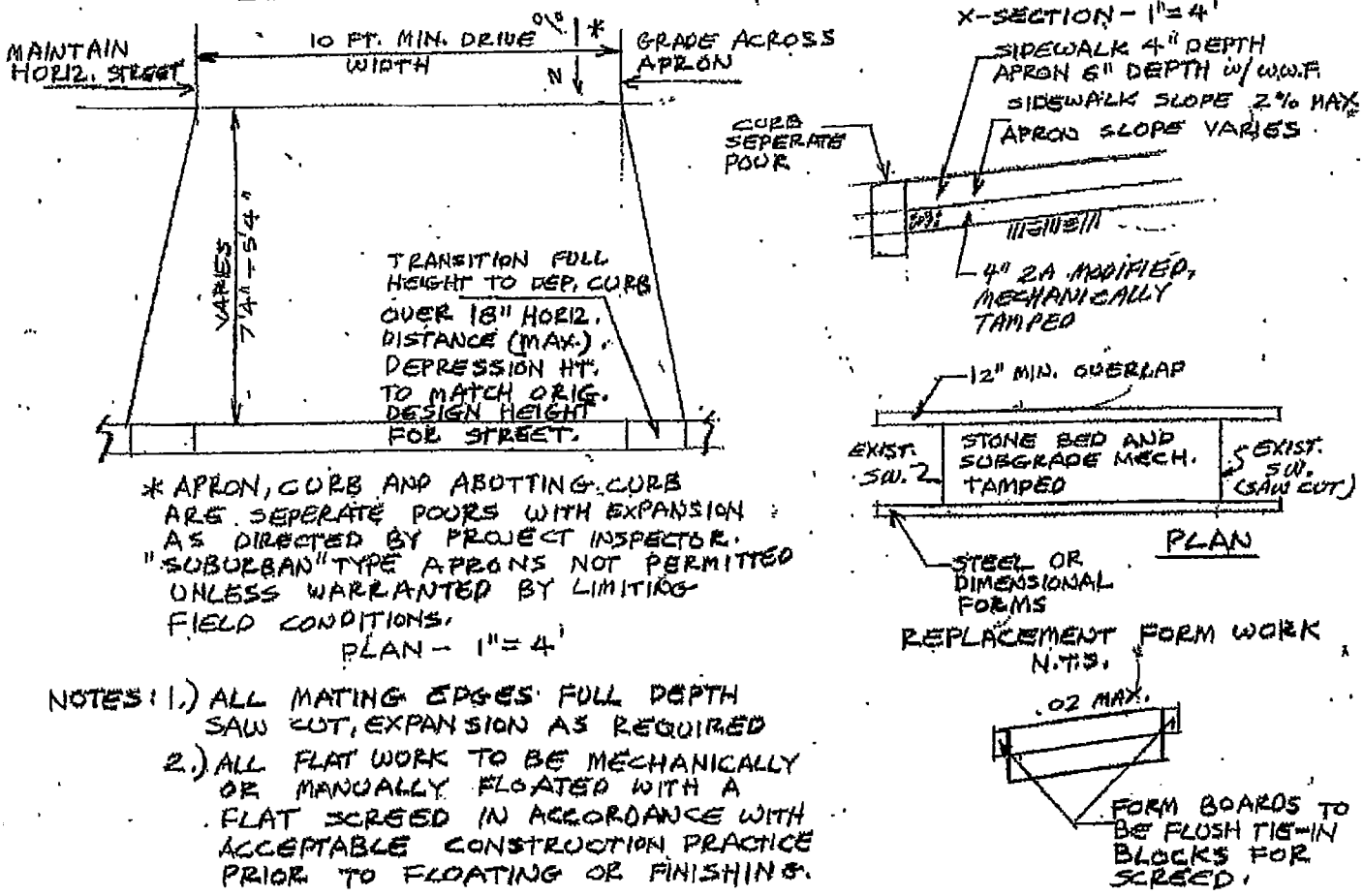

* APRON, CURB AND ABUTTING CURB ARE SEPERATE POURS WITH EXPANSION AS DIRECTED BY PROJECT INSPECTOR.
"SUBURBAN" TYPE APRONS NOT PERMITTED UNLESS WARRANTED BY LIMITING FIELD CONDITIONS.

PLAN - 1" = 4'

NOTES: 1.) ALL MATING EDGES FULL DEPTH SAW CUT, EXPANSION AS REQUIRED

2.) ALL FLAT WORK TO BE MECHANICALLY OR MANUALLY FLOATED WITH A FLAT SCREED IN ACCORDANCE WITH ACCEPTABLE CONSTRUCTION PRACTICE PRIOR TO FLOATING OR FINISHING.

SIDEWALK DETAIL

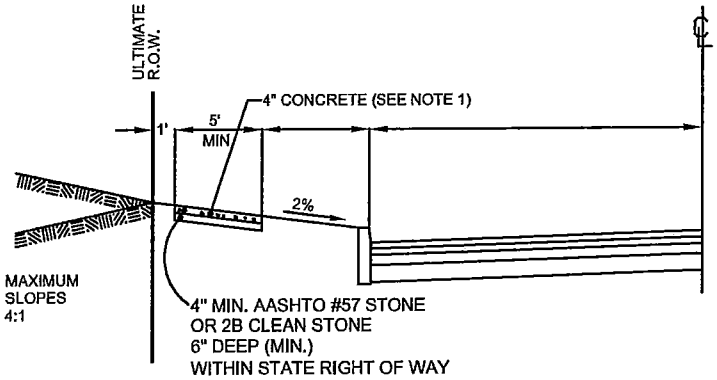

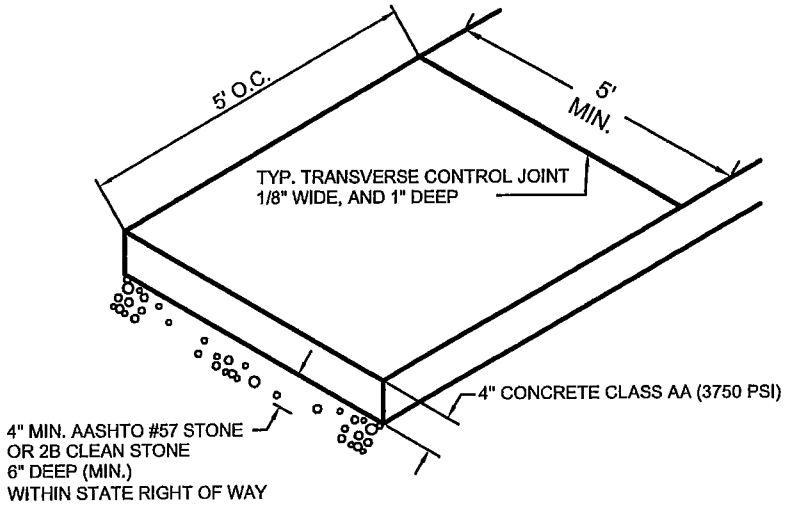

NOTES:

1. PROVIDE MATERIALS AND CONSTRUCTION IN ACCORDANCE WITH THE REQUIREMENTS OF PENNDOT PUBLICATION 408, CURRENT EDITION, AND AS MODIFIED HEREIN.
2. CONCRETE SHALL BE CLASS AA (3750 PSI), AIR ENTRAINED (6%) WITH A 4" SLUMP MAX.
3. TRANSVERSE CONTROL JOINTS ⅛" WIDE AND 1" DEEP TO BE FORMED EVERY 5 FEET.
4. EXPANSION JOINTS WITH 1/2" PRE-MOLDED MATERIAL SHALL BE PLACED EVERY 30 FEET TO FULL DEPTH.
5. ALL EDGES TO BE ROUNDED WITH A 1/4" TOOL.
6. LIGHT BROOM FINISH TO BE APPLIED.
7. WEATHER PROTECTION SHALL BE USED IN ACCORDANCE WITH PENNDOT PUBLICATION 408 CURRENT EDITION.
8. PENETRATING SEALER TO BE APPLIED IMMEDIATELY FOLLOWING FINISHING OPERATIONS. PENETRATING SEALER TO BE AQURON CPT2000 OR APPROVED EQUAL.

UPPER DUBLIN TOWNSHIP STANDARD DETAIL
PROPOSED SIDEWALK

Metz Engineers

DATE	10-2013	NOT TO SCALE	CC200

CONCRETE CURB DETAIL

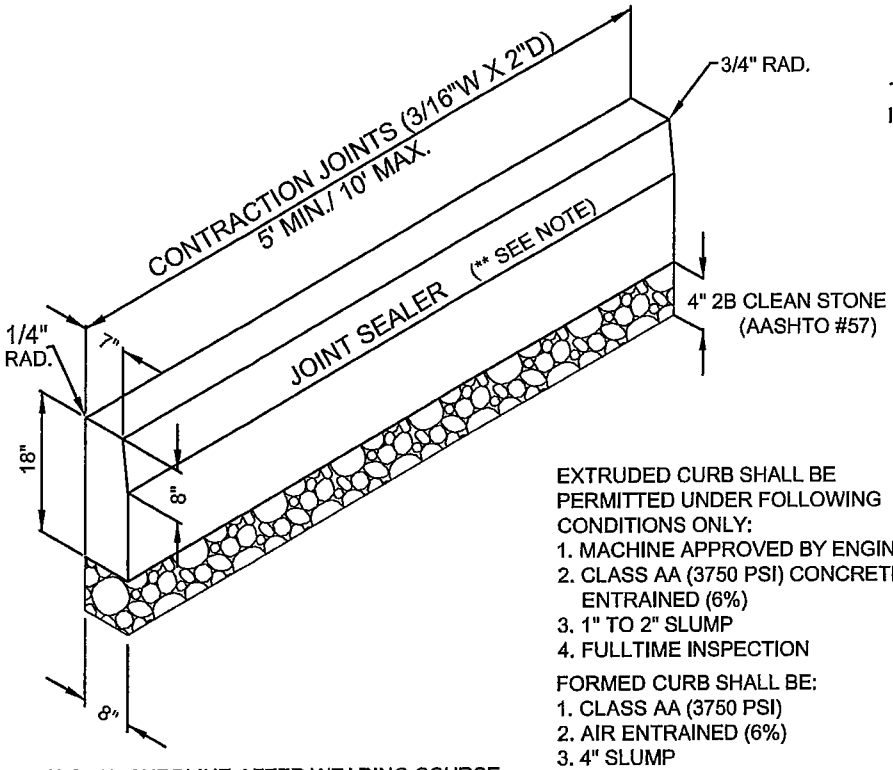

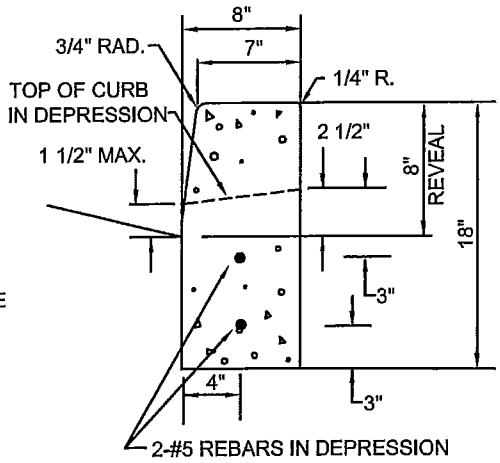

SECTION A–A

EXTRUDED CURB SHALL BE PERMITTED UNDER FOLLOWING CONDITIONS ONLY:
1. MACHINE APPROVED BY ENGINEER
2. CLASS AA (3750 PSI) CONCRETE AIR ENTRAINED (6%)
3. 1" TO 2" SLUMP
4. FULLTIME INSPECTION

FORMED CURB SHALL BE:
1. CLASS AA (3750 PSI)
2. AIR ENTRAINED (6%)
3. 4" SLUMP

** SEAL CURBLINE AFTER WEARING COURSE PLACEMENT WITH RUBBERIZED JOINT SEALING MATERIAL TYPE 4(C) AS MANUFACTURED BY CRAFCO, INC. OR APPROVED EQUAL. 2" VERTICALLY UP FACE OF CURB, 12" HORIZONTALLY OUT FROM FACE OF CURB.

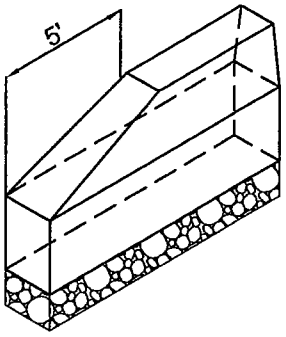

END OF CURB TAPER

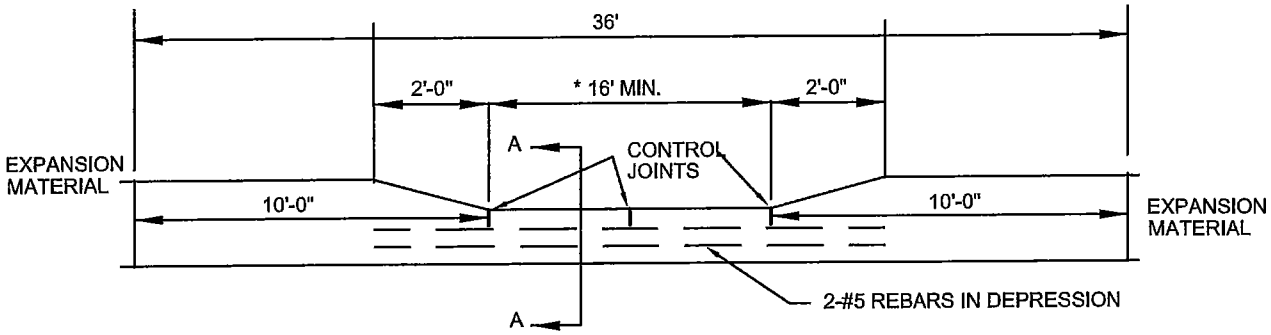

* 16' FOR 10' WIDE DRIVEWAY.
FOR WIDER DRIVEWAYS ADD 6'
TO THE DRIVE WIDTH.

NOTES:
1. PROVIDE MATERIALS AND CONSTRUCTION IN ACCORDANCE WITH THE REQUIREMENTS OF PENNDOT PUBLICATION 408, CURRENT EDITION, AND AS MODIFIED HEREIN.
2. 3/4" PREMOLDED EXPANSION JOINT MATERIAL SHALL BE PLACED AT 30 FOOT MAXIMUM SPACING TO FULL DEPTH OF CURB. (40 FOOT MAXIMUM FOR EXTRUDED CURB), AT STRUCTURES AND AT THE END OF A DAYS WORK.
3. CURB SHALL BE DOWEL PINNED INTO INLETS. 2-#8X1'-0" DOWEL BARS ON BOTH SIDES OF INLET.
4. 4" 2B CLEAN STONE UNDER CURB.
5. WEATHER PROTECTION SHALL BE USED IN ACCORDANCE WITH PENNDOT PUBLICATION 408,CURRENT EDITION.
6. PENETRATING SEALER TO BE APPLIED IMMEDIATELY FOLLOWING FINISHING OPERATIONS. PENETRATING SEALER TO BE AQURON CPT2000 OR APPROVED EQUAL.

UPPER DUBLIN TOWNSHIP STANDARD DETAIL

CONCRETE CURB DETAIL

Metz Engineers

DATE	10-2013	NOT TO SCALE	CC204

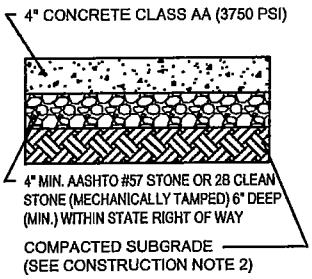

CONCRETE AND STONE CROSS SECTION

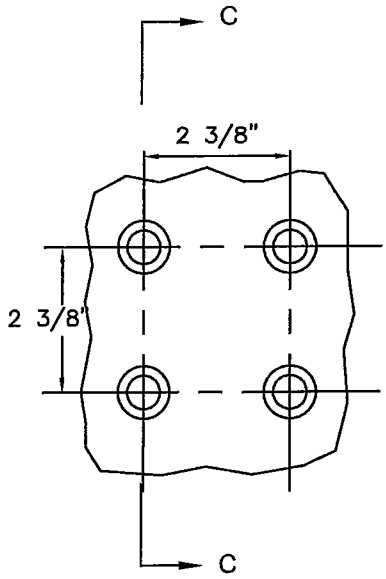

PLAN

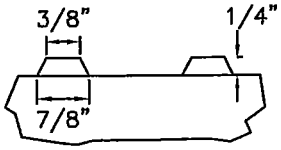

SECTION C-C

DETECTABLE WARNING TRUNCATED DOME DETAIL

DESIGN NOTES

1. EACH CURB RAMP REQUIRES AN INDIVIDUAL DESIGN, BY THE DESIGN ENGINEER. EACH INDIVIDUAL RAMP MAY REQUIRE COMPLETED DISTRICT (D6) CS-4401 INSPECTION FORMS. DESIGN MUST SHOW ALL ELEVATIONS, SLOPES ETC. AND MUST COMPLY WITH PENNDOTS ADA REFERENCE GUIDE (DISTRICT 6) AND PENNDOT RC 67m CURRENT EDITION. REFER TO CONSTRUCTION NOTES FOR CONSTRUCTION REQUIREMENTS.
2. REFER TO PENNDOT RC 67m CURRENT EDITION FOR TYPES OF RAMPS.

CONSTRUCTION NOTES:

1. PROVIDE MATERIALS AND CONSTRUCTION IN ACCORDANCE WITH THE REQUIREMENTS OF PENNDOT PUBLICATION 408, CURRENT EDITION, AND AS MODIFIED HEREIN.
2. SUBGRADE MUST BE APPROVED BY THE TOWNSHIP ENGINEER OR THE TOWNSHIP ENGINEERS REPRESENTATIVE IN THE FIELD PRIOR TO INSTALLING STONE.
3. CONCRETE SHALL BE 4" THICK (MIN.) CLASS AA (3750 PSI), AIR ENTRAINED (6%) WITH A 4" SLUMP (MAX).
4. TRANSVERSE CONTROL JOINTS 1/8" WIDE AND 1" DEEP AT THE DISCRETION OF TOWNSHIP ENGINEER OR HIS/HER REPRESENTATIVE IN FIELD.
5. CONCRETE TO BE PLACED ON A 4"(MIN.) LAYER OF AASHTO #57 STONE OR 2B CLEAN STONE (6" MIN. LAYER WITHIN STATE R/W).
6. ALL EDGES TO BE ROUNDED WITH A 1/4" TOOL.
7. FINISH CEMENT CONCRETE RAMP WITH COARSE BROOMED TEXTURE TRANSVERSE TO THE SLOPE OF CURB RAMP.
8. WEATHER PROTECTION SHALL BE USED IN ACCORDANCE WITH PENNDOT PUBLICATION 408 CURRENT EDITION.
9. PENETRATING SEALER TO BE APPLIED IMMEDIATELY FOLLOWING FINISHING OPERATIONS. PENETRATING SEALER TO BE AQURON CPT2000 OR APPROVED EQUAL.
10. ALIGN DETECTABLE WARNING DOMES ON A SQUARE GRID IN THE PREDOMINANT DIRECTION OF TRAVEL TO PERMIT WHEELS TO ROLL BETWEEN DOMES.
11. PROVIDE "CAST IN PLACE TRUNCATED DOME DETECTABLE WARNING SYSTEM " AS MANUFACTURED BY ADA SOLUTIONS, INC. OR APPROVED EQUAL. COLOR: BRICK RED.

UPPER DUBLIN TOWNSHIP STANDARD DETAIL

CURB AND SIDEWALK RAMPS

DATE	10–2013	NOT TO SCALE	CC201

Metz Engineers

CONCRETE DRIVEWAY APRON

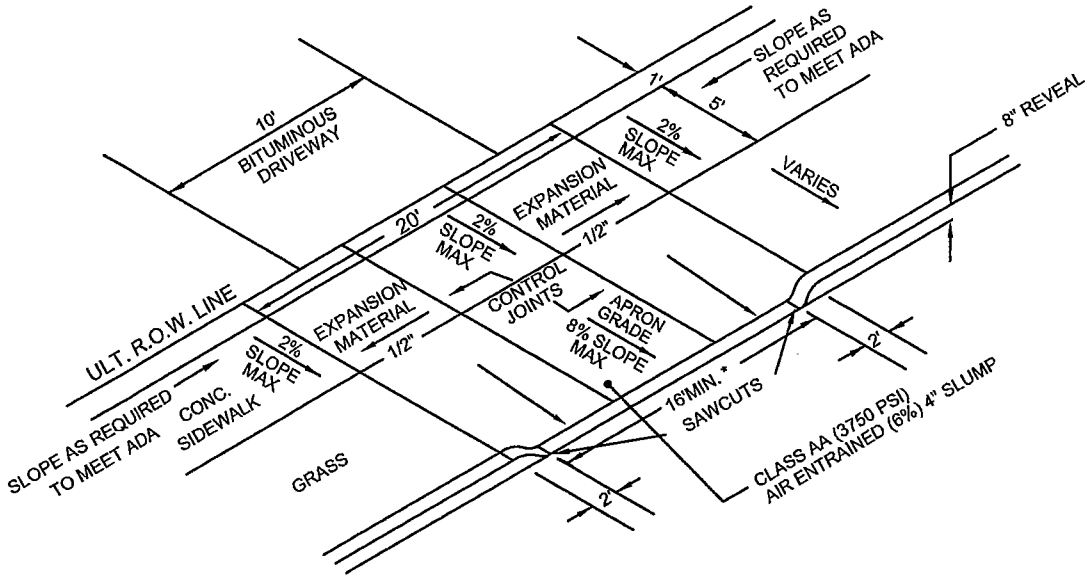

DESIGN NOTES

1. EACH APRON REQUIRES AN INDIVIDUAL DESIGN, BY THE DESIGN ENGINEER. EACH INDIVIDUAL APRON DESIGN MUST SHOW ALL ELEVATIONS, SLOPES ETC. AND MUST COMPLY WITH THE DRIVEWAY DETAILS SECTION OF PENNDOTS ADA REFERENCE GUIDE (DISTRICT 6) AND PENNDOT RC 67m CURRENT EDITION. REFER TO CONSTRUCTION NOTES FOR CONSTRUCTION REQUIREMENTS.

2. REFER TO PENNDOT RC 67m CURRENT EDITION FOR TYPES OF DRIVEWAY APRONS.

* 16' FOR 10' WIDE DRIVEWAYS.
FOR WIDER DRIVEWAYS ADD 6' TO DRIVE WIDTH.

NOTE: CONTROL JOINTS TO BE INSTALLED PER PENNDOT 408 CURRENT EDITION

CONTROL JOINT PLACEMENT TO BE AT THE DISCRETION OF THE TWP. ENGINEER OR THEIR REPRESENTATIVE IN THE FIELD.

RESIDENTIAL

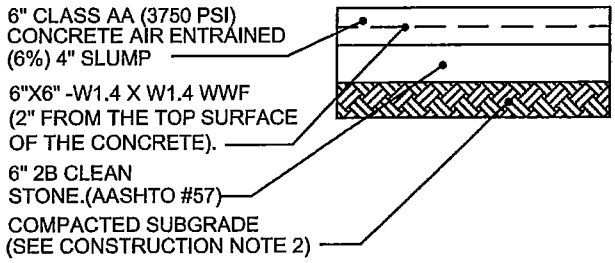

COMMERCIAL OR INDUSTRIAL

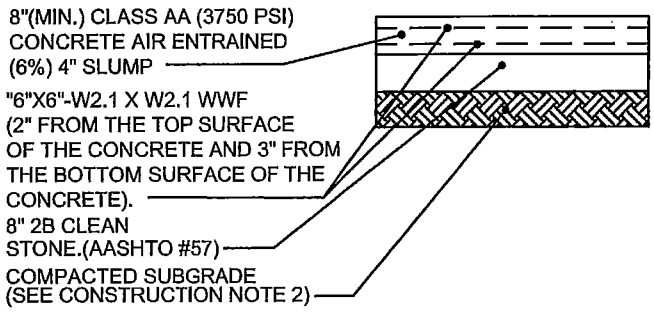

CONSTRUCTION NOTES:

1. PROVIDE MATERIALS AND CONSTRUCTION IN ACCORDANCE WITH PENNDOT PUBLICATION 408, CURRENT EDITION AND AS MODIFIED HEREIN.
2. SUBGRADE MUST BE APPROVED BY THE TOWNSHIP ENGINEER OR THE TOWNSHIP ENGINEERS REPRESENTATIVE IN THE FIELD PRIOR TO INSTALLING STONE.
3. WEATHER PROTECTION SHALL BE USED IN ACCORDANCE WITH PENNDOT PUBLICATION 408, CURRENT EDITION.
4. PENETRATING SEALER TO BE APPLIED IMMEDIATELY FOLLOWING FINISHING OPERATIONS. PENETRATING SEALER TO BE AQURON CPT2000 OR APPROVED EQUAL.

UPPER DUBLIN TOWNSHIP STANDARD DETAIL

CONCRETE DRIVEWAY APRON

Metz Engineers

DATE	10–2013	NOT TO SCALE	CC202

CONCRETE DRIVEWAY RAMP

*CURB RAMP DESIGN NOTES

1. EACH CURB RAMP REQUIRES AN INDIVIDUAL DESIGN, BY THE DESIGN ENGINEER. EACH INDIVIDUAL RAMP MAY REQUIRE COMPLETED DISTRICT 6 (D6) CS-4401 INSPECTION FORMS. DESIGN MUST SHOW ALL ELEVATIONS, SLOPES ETC. AND MUST COMPLY WITH PENNDOTS ADA REFERENCE GUIDE (DISTRICT 6) AND PENNDOT RC 67m CURRENT EDITION. REFER TO CONSTRUCTION NOTES FOR CONSTRUCTION REQUIREMENTS.

2. REFER TO PENNDOT RC 67m CURRENT EDITION FOR TYPES OF RAMPS.

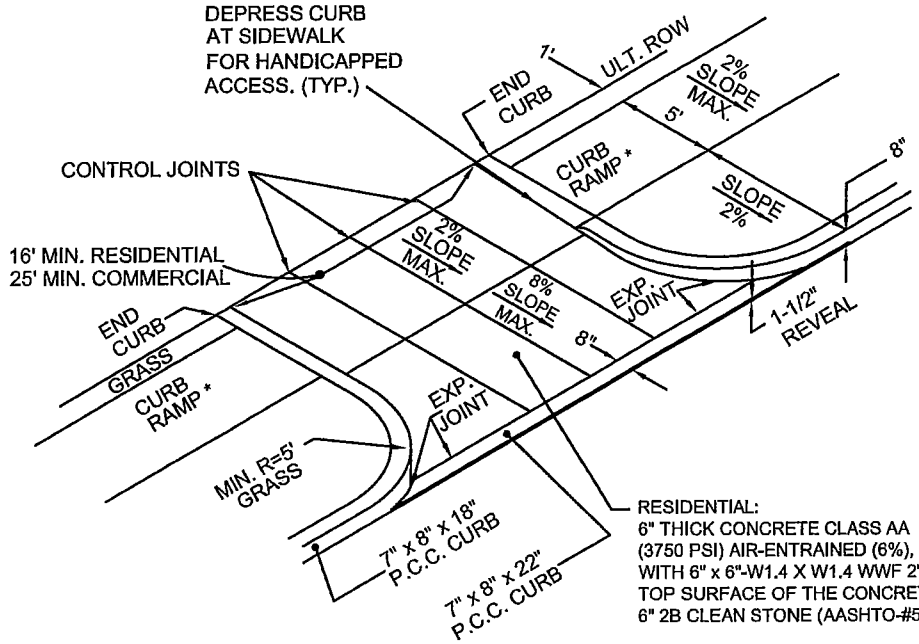

DRIVEWAY APRON DESIGN NOTES

1. EACH APRON REQUIRES AN INDIVIDUAL DESIGN, BY THE DESIGN ENGINEER. EACH INDIVIDUAL APRON DESIGN MUST SHOW ALL ELEVATIONS, SLOPES ETC. AND MUST COMPLY WITH THE DRIVEWAY DETAILS SECTION OF PENNDOTS ADA REFERENCE GUIDE (DISTRICT 6) AND PENNDOT RC 67m CURRENT EDITION. REFER TO CONSTRUCTION NOTES FOR CONSTRUCTION REQUIREMENTS.

2. REFER TO PENNDOT RC 67m CURRENT EDITION FOR TYPES OF DRIVEWAY APRONS.

RESIDENTIAL:
6" THICK CONCRETE CLASS AA (3750 PSI) AIR-ENTRAINED (6%), 4" SLUMP) WITH 6" x 6"-W1.4 X W1.4 WWF 2" FROM THE TOP SURFACE OF THE CONCRETE ON 6" 2B CLEAN STONE (AASHTO-#57)

COMMERCIAL OR INDUSTRIAL:
8"(MIN.) THICK CONCRETE CLASS AA (3750 PSI) AIR ENTRAINED (6%) 4" SLUMP WITH 6"X6"-W2.1 X W2.1 WWF. 2" FROM THE TOP SURFACE OF THE CONCRETE AND 3" FROM THE BOTTOM SURFACE OF THE CONCRETE ON 8" 2B CLEAN STONE (AASHTO #57).

CONSTRUCTION NOTES:

1. PROVIDE MATERIALS AND CONSTRUCTION IN ACCORDANCE WITH THE REQUIREMENTS OF PENNDOT PUBLICATION 408, CURRENT EDITION, AND AS MODIFIED HEREIN.
2. SUBGRADE MUST BE APPROVED BY THE TOWNSHIP ENGINEER OR THE TOWNSHIP ENGINEERS REPRESENTATIVE IN THE FIELD PRIOR TO INSTALLING STONE.
3. WEATHER PROTECTION SHALL BE USED IN ACCORDANCE WITH PENNDOT PUBLICATION 408, CURRENT EDITION.
4. PENETRATING SEALER TO BE APPLIED IMMEDIATELY FOLLOWING FINISHING OPERATIONS. PENETRATING SEALER TO BE AQURON CPT2000 OR APPROVED EQUAL.

UPPER DUBLIN TOWNSHIP STANDARD DETAIL
CONCRETE DRIVEWAY RAMP
WITH CURBED RADIUS RETURNS

Metz Engineers

DATE	10–2013	NOT TO SCALE	CC203